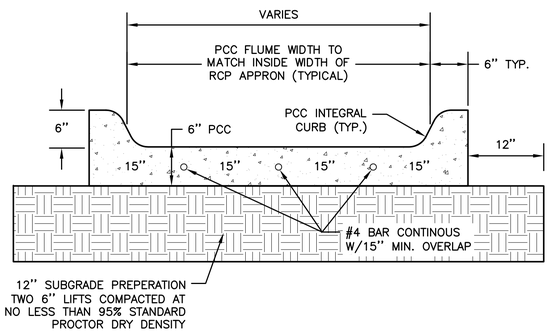

TYPICAL CROSS SECTION

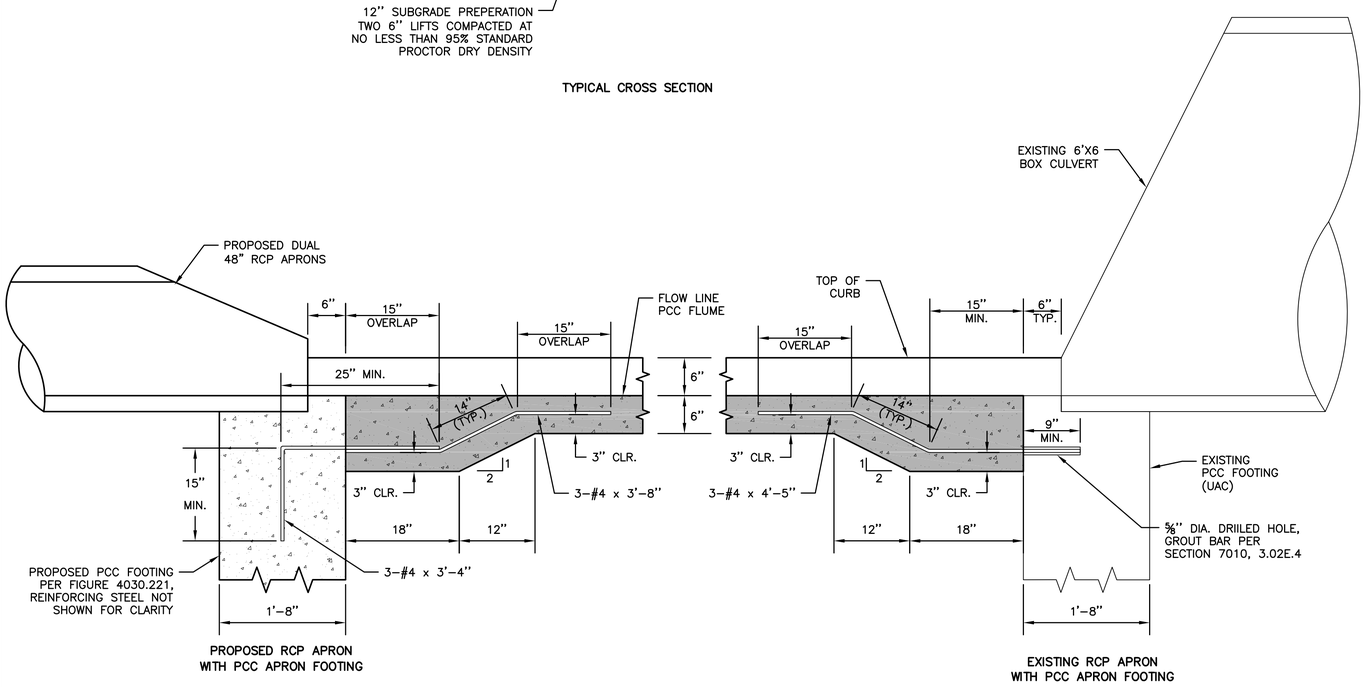

PC CONCRETE FLUME DETAIL

NOT TO SCALE

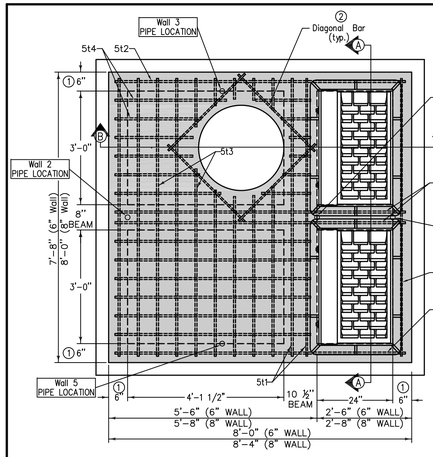

PLAN

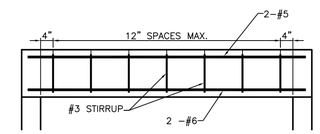

10 1/2" AND 8" BEAM DETAIL

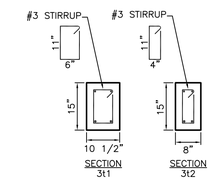

MAXIMUM PIPE DIAMETERS	
Wall	Max. Dia.
2	48"
3	36"
4	48"
5	36"

1. Use 8" wall option for intake depths greater than 7'-0" and less than 10'-0".
2. Install four #5 diagonal bars at manhole opening and at all pipe openings.
3. Cast-in-place base shown. If base is precast integral with walls, the footprint of base is not required to extend beyond the outer edge of the walls.
4. 12 inch minimum wall height above all pipes.
5. Construct 8"x15" and 10 1/2"x15" P.C. concrete beams integral with 12" P.C. concrete flat top.

REINFORONG BAR LIST

Mark	Size	Location	Shape	Count		Length		Spacing	
				6" Wall	8" Wall	6" Wall	8" Wall	6" Wall	8" Wall
3t1	3	Top	▭	7	7	3'-2" *	3'-2" *	12"	12"
3t2	3	Top	▭	8	8	2'-10" *	2'-10" *	10 7/8"	10 7/8"
5b1	5	Base	——	9	9	7'-10"	8'-2"	12 3/4"	12 3/4"
5b2	5	Base	——	9	9	8'-2"	8'-6"	11 3/4"	12 1/4"
6w1	6	Walls	——	30	30	Wall Height minus 4""		12"	12"
6w2	6	Walls	——	Varies	Varies	7'-8"	8'-0"	12"	12"
6w3	6	Walls	——	Varies	Varies	7'-4"	7'-8"	12"	12"
5t1	5	Top	——	4	4	7'-4"	7'-8"	See Detail	See Detail
5t2	5	Top	——	6	6	7'-8"	8'-0"	See Detail	See Detail
5t3	5	Top	——	18	18	7'-4"	7'-8"	6 3/4"	6 1/4"
5t4	5	Top	——	24	24	5'-2"	5'-4"	5 7/8"	6"
6t1	6	Top	——	2	2	7'-4"	7'-8"	See Detail	See Detail
6t2	6	Top	——	2	2	7'-8"	8'-0"	See Detail	See Detail

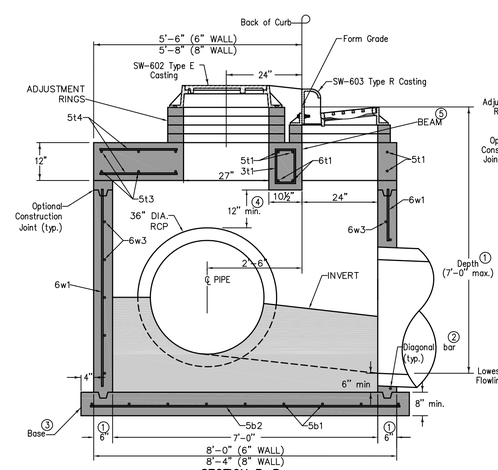

SECTION B-B

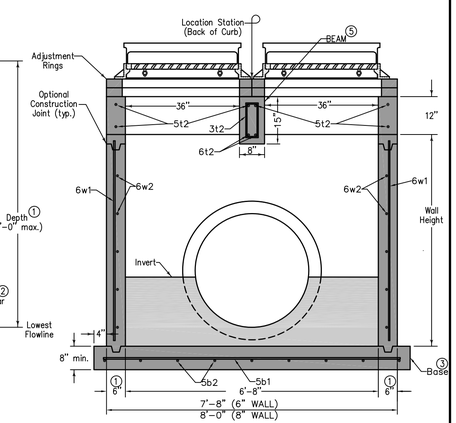

SECTION A-A

MODIFIED SW-506 INTAKE (ST-6)

DOUBLE GRATE INTAKE WITH MANHOLE

* REFER TO SHEET 14 FOR LOCATION.

REVISIONS	DATE
FINAL SUBMITTAL	05/31/16
THIRD SUBMITTAL	05/24/16
SECOND SUBMITTAL	05/06/16
FIRST SUBMITTAL	04/18/16

3405 S.E. CROSSROADS DRIVE, SUITE G
GRIMES, IOWA 50111
PHONE: (515) 369-4400 FAX: (515) 369-4410
ENGINEER: EI: GH
CIVIL DESIGN ADVANTAGE

TRESTLE CROSSING PLAT 1

TYPICAL SECTIONS AND DETAILS

ANKENY, IOWA

1604.157

FILE: H:\2016\1604157\DWG\1604157-COV-DET-TAB.DWG
REVISED: 6/16/16 PLOTTED: 6/17/2016 7:43 AM
PLOTTED BY: GRAE HEROLD TECH:
COMMENT:
ENG:

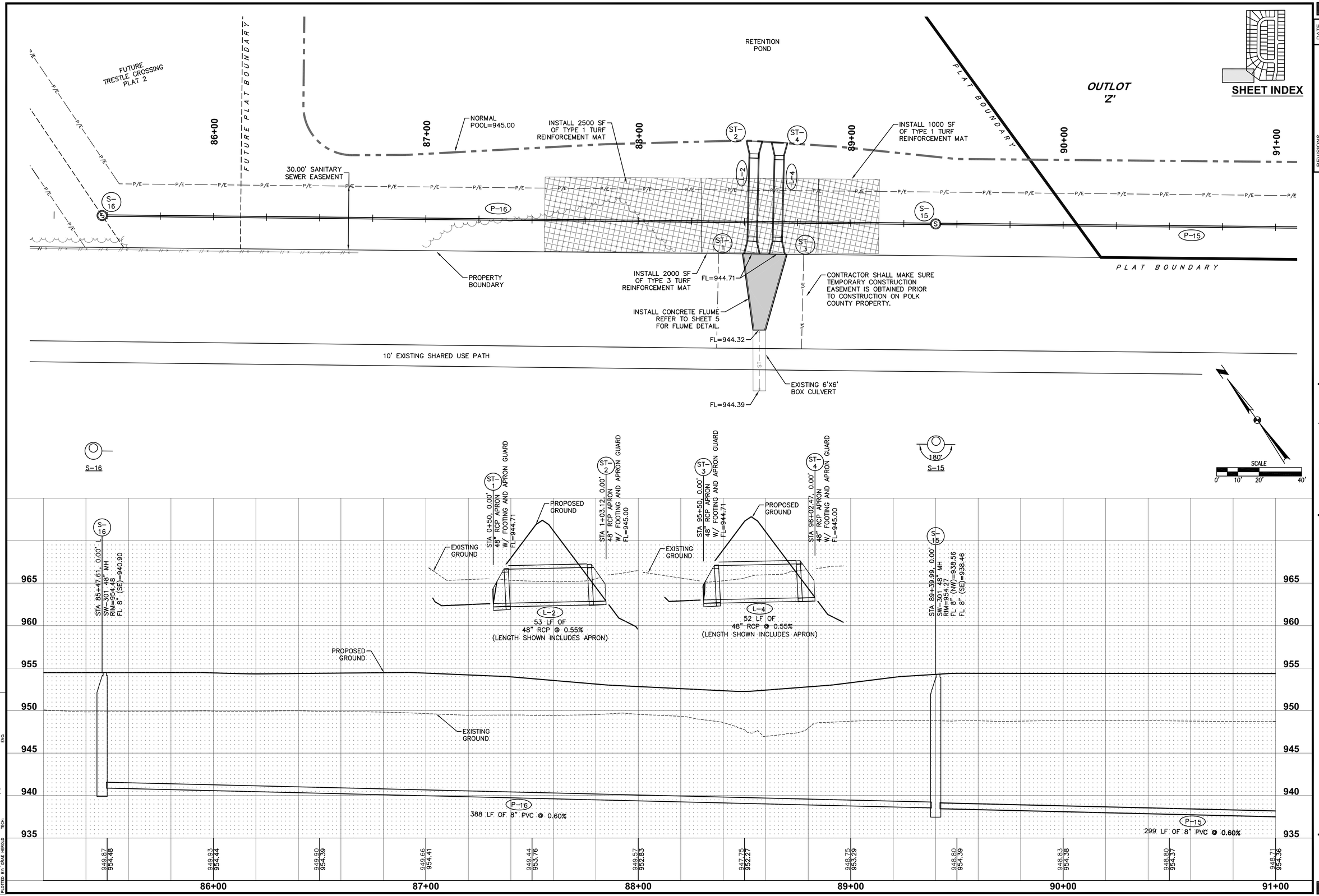

REVISIONS	DATE
FINAL SUBMITTAL	05/31/16
THIRD SUBMITTAL	05/24/16
SECOND SUBMITTAL	05/06/16
FIRST SUBMITTAL	04/18/16

3405 S.E. CROSSROADS DRIVE, SUITE G
GRIMES, IOWA 50111
PHONE: (515) 369-4400 FAX: (515) 369-4410

ENGINEER: EI: GH

CIVIL DESIGN ADVANTAGE

TRESTLE CROSSING PLAT 1

PLAN AND PROFILE

ANKENY, IOWA

1604.157

FILE: H:\2016\1604157\DWG\1604157-PKP.DWG
PLOTTED BY: GRAE HEROLD LAST PLOTTED: 6/1/2016 7:47 AM
COMMENT:
ENG:
TECH: